BROWARD COUNTY PUBLIC WORKS DEPARTMENT
PLOTTED: 10/2024

WATER & WASTEWATER SERVICES
ENGINEERING DIVISION
2555 WEST COPANS ROAD
POMPANO BEACH, FL 33069
PHONE NO. 954-831-0745
FAX: 954-831-0925

STANDARD DETAIL

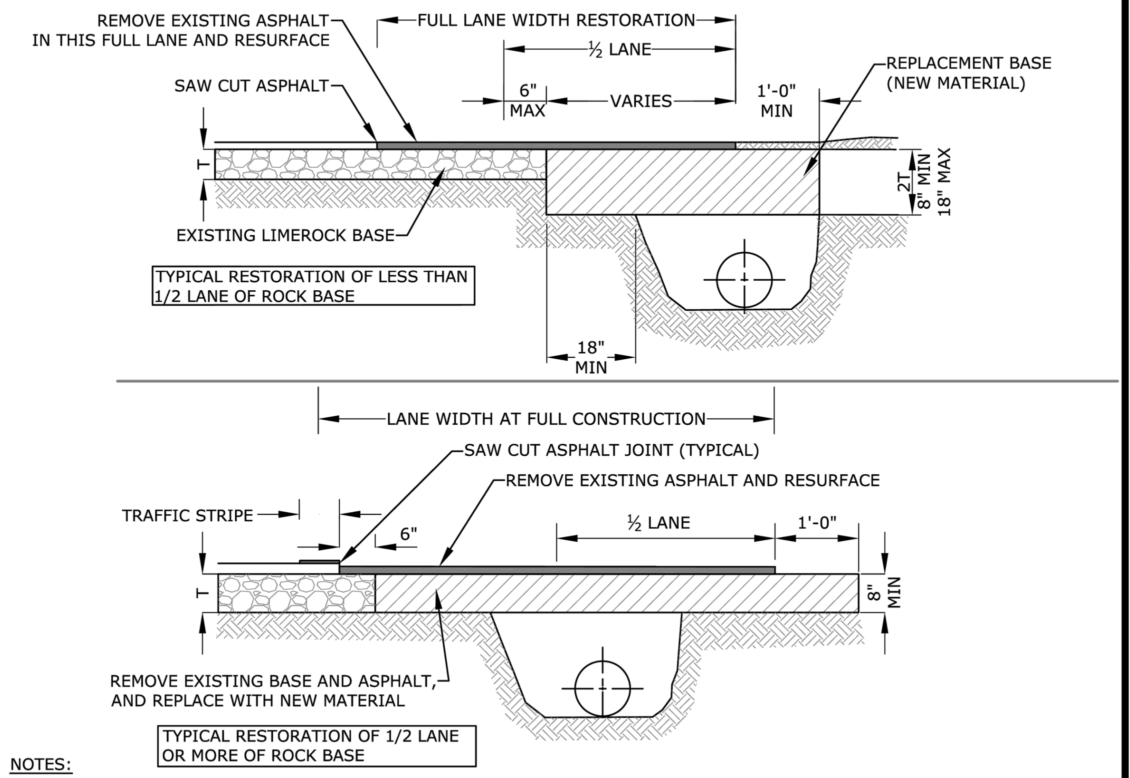

NOTES:

1. BASE MATERIAL SHALL HAVE A MINIMUM LBR OF 100 AND A MINIMUM CARBONATE CONTENT OF 70%.
2. BASE SHALL BE PLACED IN 6" MAXIMUM THICKNESS LAYERS WITH EACH LAYER COMPACTED AS REQUIRED AND TESTED PRIOR TO THE PLACEMENT OF THE SUCCEEDING LAYERS.
3. SUBGRADE MATERIAL SHALL BE GRANULAR AND ANGULAR AND SHALL HAVE A MINIMUM LBR OF 40.
4. BACKFILL SHALL BE PLACED AND COMPACTED IN 6" LAYERS, BUT TESTING WILL BEGIN 12" ABOVE THE INSTALLED UTILITY.
5. ALL EDGES OF EXISTING ASPHALT PAVEMENT THAT ABUT RESURFACING SHALL BE SAW CUT IN STRAIGHT LINES PARALLEL TO OR PERPENDICULAR TO THE ROADWAY, PRIOR TO RESURFACING.
6. RESURFACING MATERIAL SHALL BE CONSISTENT WITH SURROUNDING SURFACE, AND SHALL BE APPLIED IN 2 LIFTS, A MINIMUM OF ¾ INCH.
7. TRAFFIC STRIPES SHALL NOT BE PLACED DIRECTLY ON TOP OF THE JOINT
8. FOR STATE ROADS REFER TO FDOT SPECIFICATIONS AND REQUIREMENTS.

T = EXISTING LIMEROCK BASE THICKNESS.

REVISED	RESTORATION OF ROADWAY CUT FOR PARALLEL UTILITY INSTALLATION	FIGURE 182
7/7/2021		

BROWARD COUNTY PUBLIC WORKS DEPARTMENT
PLOTTED: 10/2024

WATER & WASTEWATER SERVICES
ENGINEERING DIVISION
2555 WEST COPANS ROAD
POMPANO BEACH, FL 33069
PHONE NO. 954-831-0745
FAX: 954-831-0925

STANDARD DETAIL

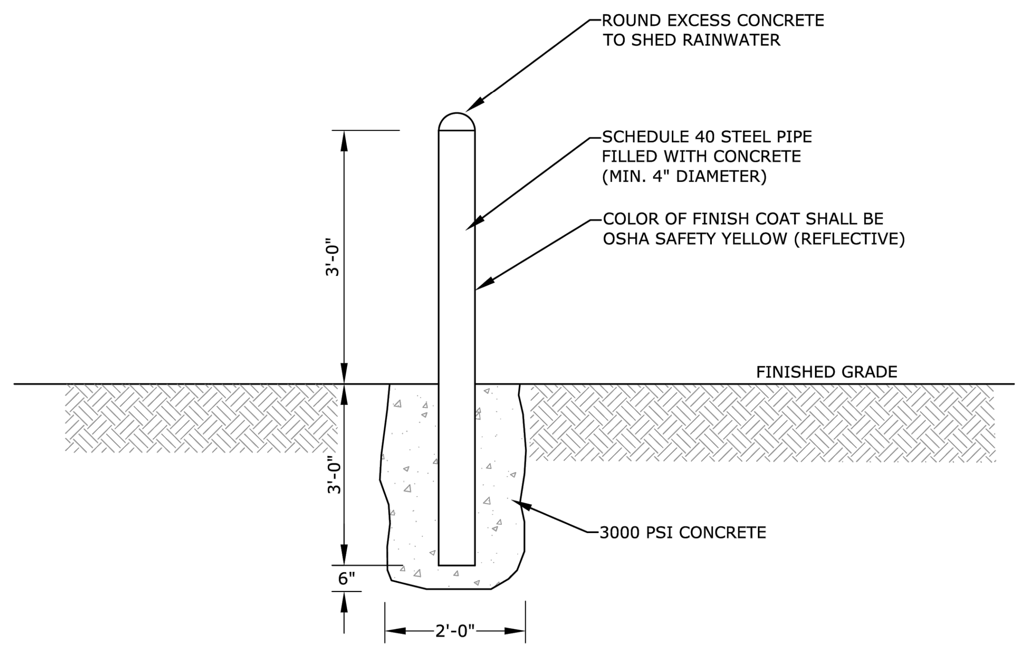

REVISED	BOLLARD	FIGURE 194
7/7/2021		

STANDARD DETAIL

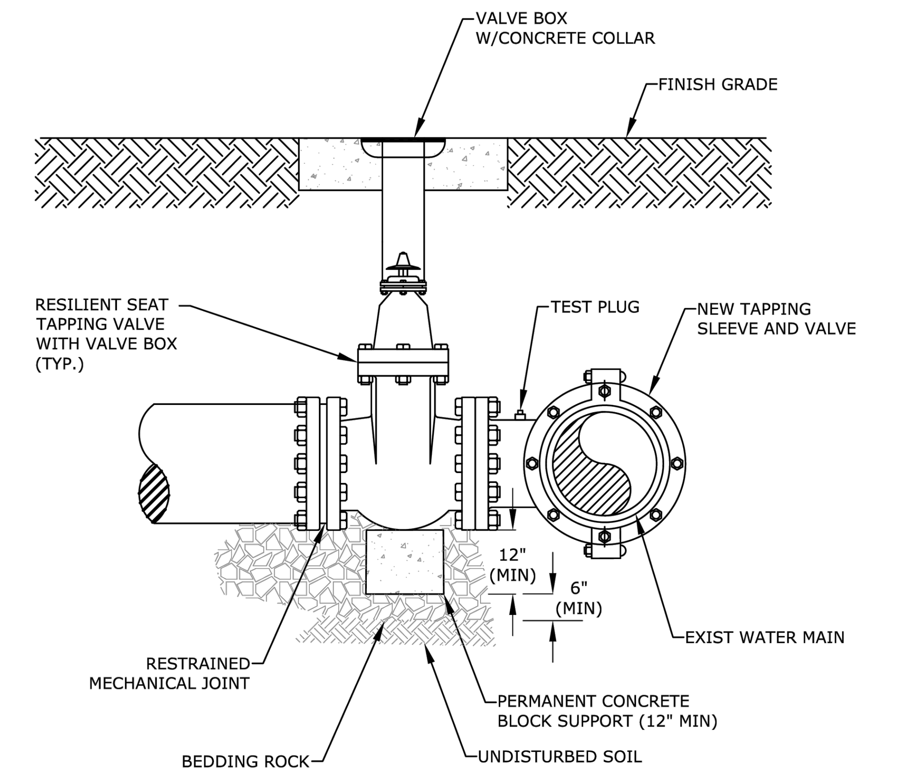

NOTES:

1. REFER TO WWS MINIMUM DESIGN AND CONSTRUCTION STANDARDS FOR MINIMUM REQUIREMENTS AND PRE-APPROVED MANUFACTURERS.
2. MAIN SHALL BE CLEANED BEFORE ATTACHING SLEEVE
3. SLEEVE AND VALVE SHALL BE PRESSURE TESTED BEFORE MAKING TAP. PRESSURE TEST AND TAP SHALL BE MADE IN PRESENCE OF AN AUTHORIZED COUNTY REPRESENTATIVE.
4. TAP SHALL BE MADE NO CLOSER THAN 18" FROM THE NEAREST JOINT.
5. CONCRETE BLOCK SHALL COMPLETELY SUPPORT TAPPING VALVE.
6. RESTRAINT JOINT REQUIREMENTS SHALL BE IN ACCORDANCE WITH WWS MINIMUM DESIGN AND CONSTRUCTION STANDARDS.

REVISED	TAPPING SLEEVE AND VALVE INSTALLATION	FIGURE 196
7/7/2021		

STANDARD DETAIL

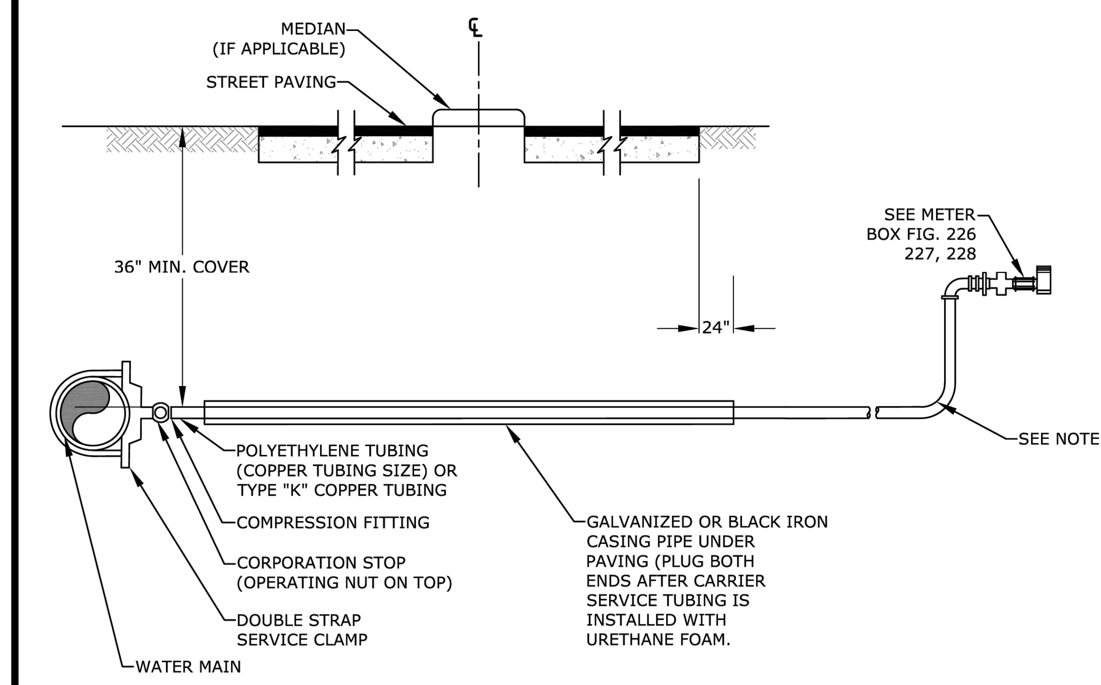

NOTES:

1. SUCCESSIVE TAPS INTO THE WATER MAIN SHALL BE SPACED NOT LESS THAN 18" ON CENTER. NO TAPS SHALL BE CLOSER THAN 18" TO A JOINT.
2. 1" SERVICES REQUIRE A 2" MINIMUM INSIDE DIAMETER CASING PIPE.
3. 2" SERVICES REQUIRE A 3" MINIMUM INSIDE DIAMETER CASING PIPE.
4. ALL CASING PIPE SHALL EXTEND A MINIMUM OF 2' BEYOND THE EDGE OF PAVED STREETS.
5. FOR 1" SERVICE LINES THE MINIMUM RADIUS SHALL BE 14". FOR 2" SERVICE LINES THE MINIMUM RADIUS SHALL BE 21".
6. ALL CASING PIPE ENDS SHALL BE FILED SMOOTH WITH NO BURRS AND SEALED WITH URETHANE FOAM.
7. THE POLYETHYLENE OR COPPER TUBING SHALL BE ONE CONTINUOUS PIECE FROM THE CORPORATION STOP TO THE CHECK VALVE. NO JOINTS WILL BE PERMITTED BETWEEN THESE POINTS.

THIS DETAIL APPLIES ONLY TO COUNTY ARTERIAL AND COLLECTOR ROADS (70' TO 120' R/W) AND ALL STATE ROAD R/W

REVISED	TYPE 2 WATER SERVICE CONNECTION	FIGURE 222
7/7/2021		

STANDARD DETAIL

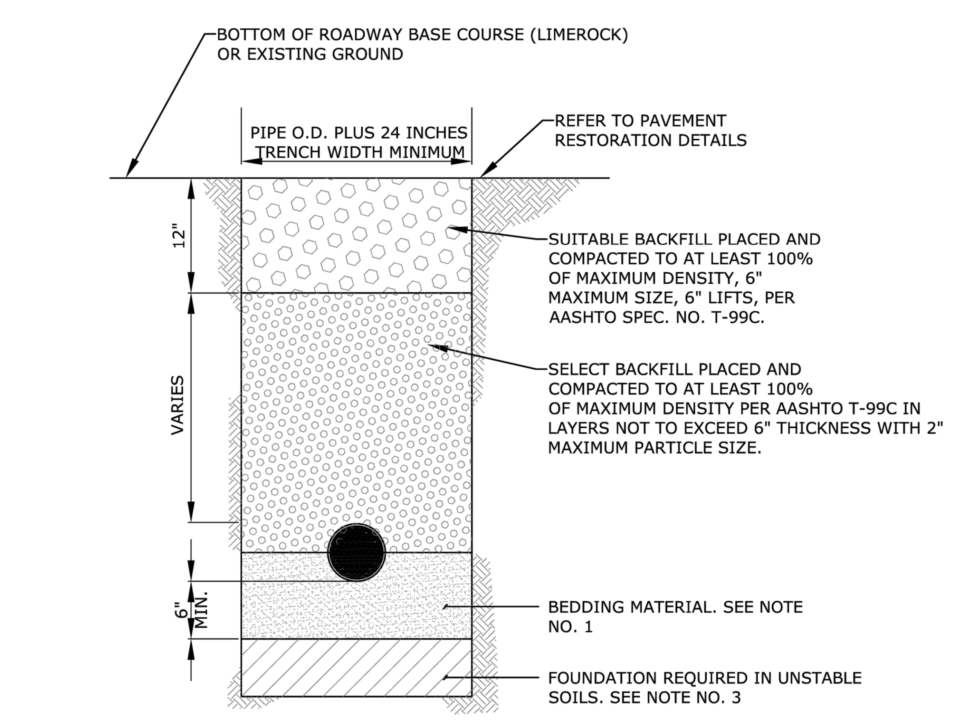

NOTES:

1. UNLESS OTHERWISE SPECIFIED, BEDDING MATERIAL SHALL CONSIST OF SELECT BACKFILL MATERIAL 2" MAXIMUM PARTICLE SIZE, COMPACTED TO AT LEAST 100% OF MAX. DENSITY, 6" LIFTS, PER AASHTO SPEC. NO. T-99C.
2. WHERE REQUIRED, SHEETING AND SHORING SHALL BE IN ACCORDANCE WITH OSHA REQUIREMENTS.
3. WHERE UNSTABLE SOILS ARE ENCOUNTERED, INCLUDING PEAT, MUCK OR OTHER ORGANIC SOILS, ELASTIC SILT AND CLAYS, A FOUNDATION IS REQUIRED AS DETERMINED BY THE ENGINEER OF RECORD.

REVISED	TYPICAL TRENCH BACKFILL	FIGURE 180
7/7/2021		

STANDARD DETAIL

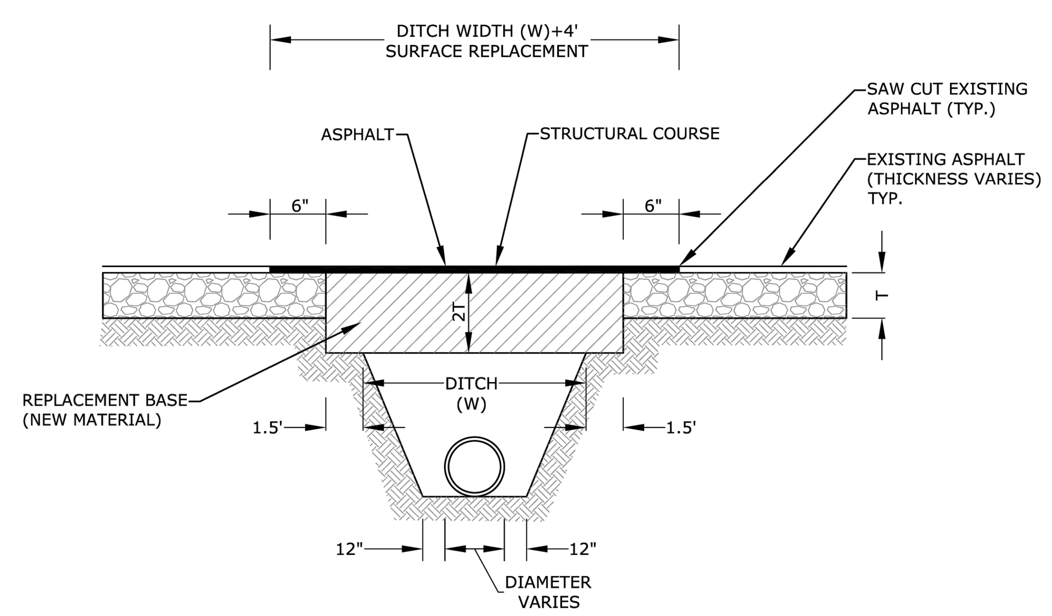

NOTES:

1. BASE MATERIAL OVER DITCH SHALL BE TWICE THE THICKNESS OF THE ORIGINAL.
2. BASE MATERIAL SHALL BE PLACED IN 6" MAXIMUM LAYERS (LOOSE MEASUREMENT) AND EACH LAYER THOROUGHLY ROLLED OR TAMPED TO 98% OF MAXIMUM DENSITY, PER AASHTO T-180.
3. ASPHALT CONCRETE PAVEMENT JOINTS SHALL BE MECHANICALLY SAW CUT.
4. SURFACE MATERIAL SHALL BE CONSISTENT WITH THE SURROUNDING SURFACE MATERIAL.
5. BASE MATERIAL SHALL HAVE A MINIMUM CARBONATE OF 70%.
6. SUB GRADE MATERIAL SHALL BE GRANULAR AND ANGULAR AND SHALL HAVE A MINIMUM LBR OF 40.
7. IF THE DITCH IS FILLED TEMPORARILY, IT SHALL BE COVERED WITH A 2" THICK ASPHALT CONCRETE PATCH TO KEEP THE FILL MATERIAL FROM RAVELING, UNTIL REPLACED WITH A PERMANENT PATCH.
8. FOR STATE ROADS REFER TO FDOT SPECIFICATIONS AND REQUIREMENTS.

T = EXISTING LIMEROCK BASE THICKNESS.

REVISED	RESTORATION OF ROADWAY CUT FOR PERPENDICULAR UTILITY INSTALLATION	FIGURE 183
7/7/2021		

STANDARD DETAIL

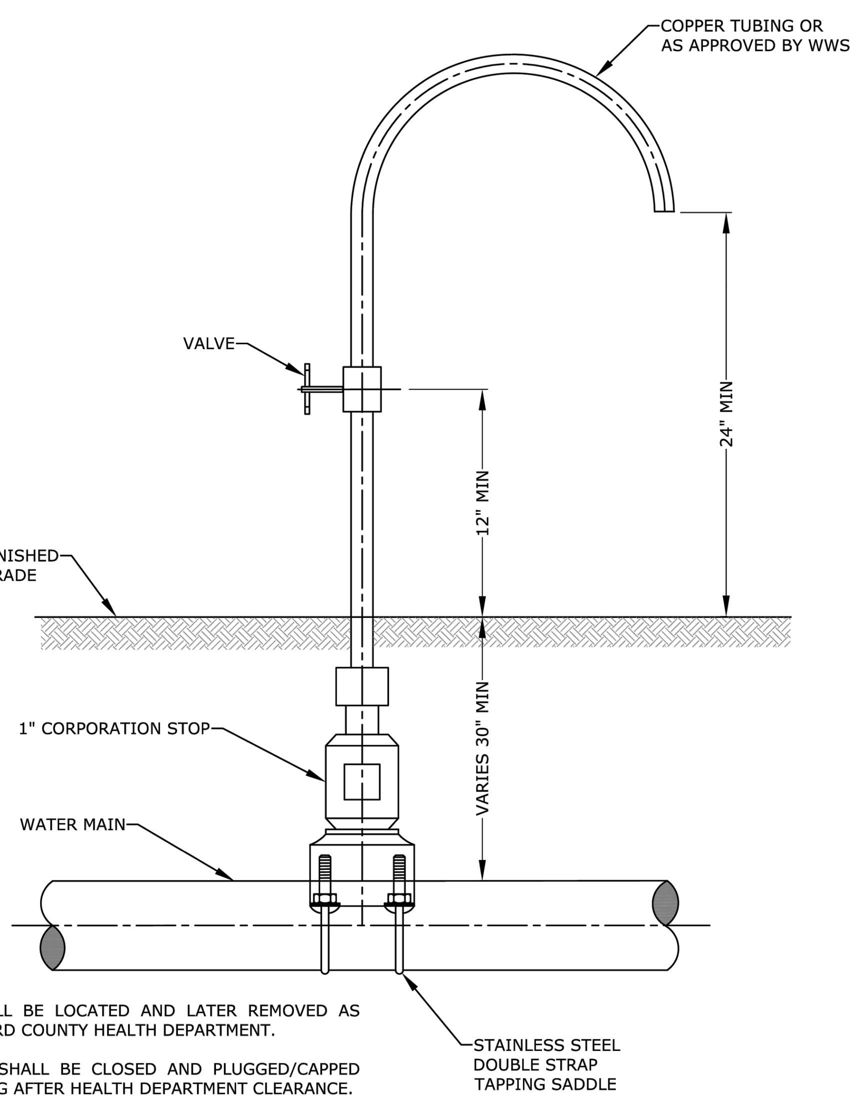

NOTES:

1. SAMPLE POINTS SHALL BE LOCATED AND LATER REMOVED AS REQUIRED BY BROWARD COUNTY HEALTH DEPARTMENT.
2. CORPORATION STOP SHALL BE CLOSED AND PLUGGED/CAPPED WITH A BRASS FITTING AFTER HEALTH DEPARTMENT CLEARANCE.
3. SAMPLING POINTS MAY BE PLACED AT THE ENDS OF WATER SERVICES BEFORE THE METERS AND ON BLOW OFFS FOR TERMINAL WATER MAINS, WHERE SERVICES AND BLOW OFFS ARE REQUIRED BY THE PLANS.

REVISED	SAMPLING POINT	FIGURE 206
7/7/2021		

STANDARD DETAIL

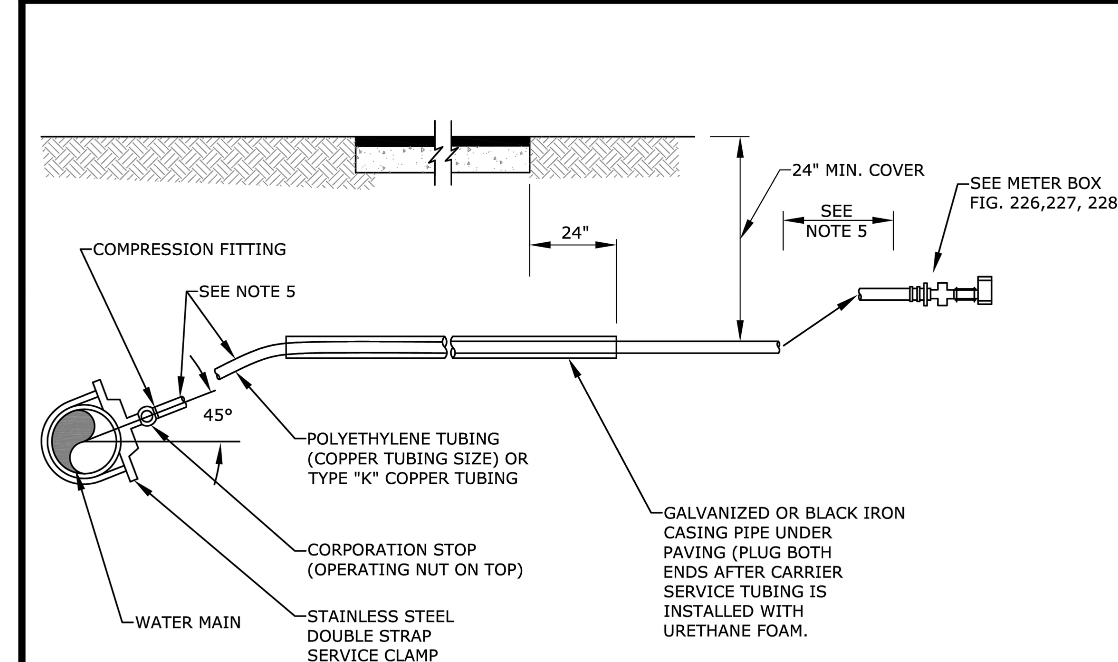

NOTES:

1. SUCCESSIVE TAPS INTO THE WATER MAIN SHALL BE SPACED NOT LESS THAN 18" ON CENTER. NO TAPS SHALL BE CLOSER THAN 18" TO A JOINT.
2. 1" SERVICE REQUIRE A 2" MINIMUM INSIDE DIAMETER CASING PIPE.
3. 2" SERVICE REQUIRE A 3" MINIMUM INSIDE DIAMETER CASING PIPE.
4. ALL CASING PIPE SHALL EXTEND A MINIMUM OF 2' BEYOND THE EDGE OF PAVED STREETS.
5. FOR 1" SERVICE LINES THE MINIMUM RADIUS SHALL BE 14". FOR 2" SERVICE LINES THE MINIMUM RADIUS SHALL BE 21".
6. ALL CASING PIPE ENDS SHALL BE FILED SMOOTH WITH NO BURRS AND SEALED WITH URETHANE FOAM.
7. THE POLYETHYLENE OR COPPER TUBING SHALL BE ONE CONTINUOUS PIECE FROM THE CORPORATION STOP TO THE CHECK VALVE. NO JOINTS WILL BE PERMITTED BETWEEN THESE POINTS.

THIS DETAIL APPLIES ONLY TO RESIDENTIAL ROADS WITH LESS THAN 70' R.O.W. (NO MEDIAN) OR WITHIN EASEMENTS

REVISED	TYPE 1 WATER SERVICE CONNECTION	FIGURE 221
7/7/2021		

	DATE	BY
REV PER CITY COMMENTS	08/25/25	DJP
REVISIONS	DATE	BY

FILE NAME 11181ENG.dwg

CAULFIELD & WHEELER, INC.
CIVIL ENGINEERING
LANDSCAPE ARCHITECTURE - SURVEYING
7900 GLADES ROAD - SUITE 100
BOCA RATON, FLORIDA 33434
PHONE (561)-392-1991 / FAX (561)-750-1452

THE SATORI AT LIGHTHOUSE POINT
4211 N FEDERAL HIGHWAY
WATER DISTRIBUTION & SANITARY SEWER DETAILS
POMPANO BEACH, FL, 33064

DATE 05/28/25
DRAWN BY DJP
F.B./ PG. ----
SCALE N/A

Digitally signed by Matthew V. Kahn Date: 2025.08.25 18:46:21 -04'00' Adobe Acrobat version: 2024.002.20687

MATTHEW V. KAHN
PROFESSIONAL ENGINEER
LICENSE NO. 82227
STATE OF FLORIDA
– FOR THE FIRM –
DATE

JOB # 11146
SHT.NO. WS-3
OF 16 SHEETS

DRC
PZ25-12000016
10/01/2025

Drawing: P:\11146-00-00-00\drawings\eng\details\11146DETAILS-WS_BROWARD.dwg\14-W&S-DETAILS-WS-3